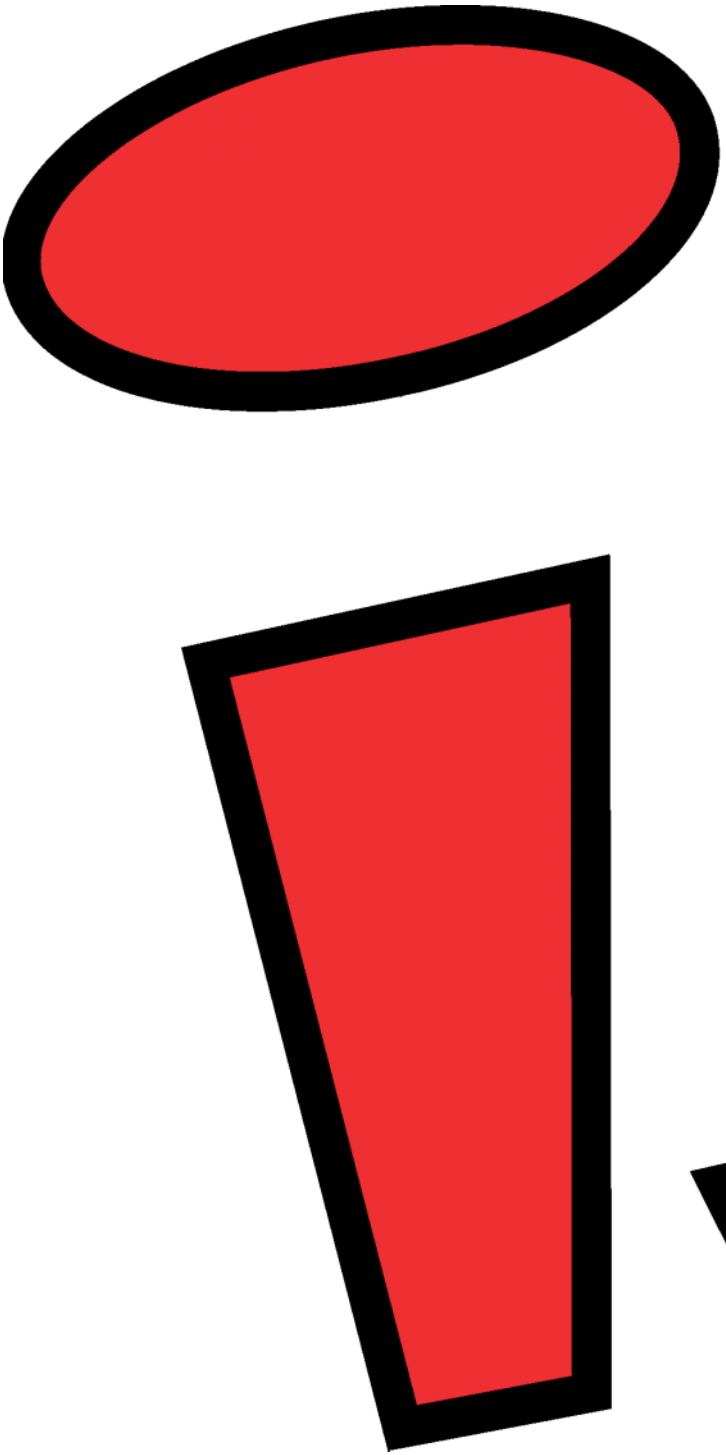

iDOT.computers

SA Series Systems
User's Handbook

## FCC Declaration of Conformity

This device complies with Part 15 of the FCC Rules. Operation is subject to the following two conditions: (1) this device may not cause harmful interference, and (2) this device must accept any interference received, including interference that may cause undesired operation.

For questions related to the EMC performance of this product, contact:

iDOT.com
1 Chisholm Trail Road, Suite 3200
Round Rock, Texas 78681 USA

This equipment has been tested and found to comply with the limits for a Class B digital device, pursuant to Part 15 of the FCC Rules. These limits are designed to provide reasonable protection against harmful interference in a residential installation. This equipment generates, uses, and can radiate radio frequency energy and, if not installed and used in accordance with the instructions, may cause harmful interference to radio communications. However, there is no guarantee that interference will not occur in a particular installation. If this equipment does cause harmful interference to radio or television reception, which can be determined by turning the equipment off and on, the user is encouraged to try to correct the interference by one or more of the following measures:

- Reorient or relocate the receiving antenna.
- Increase the separation between the equipment and the receiver.
- Connect the equipment to an outlet on a circuit other than the one to which the receiver is connected.


| Part Number | Edition | Date |
|---|---|---|
| DOC1034 | First | February 2000 |



iDOT.computers, iDOT.com, and PCs for Smarties are trademarks of iDOT.com, Inc. All other brand names and product names are trademarks or registered trademarks of their respective companies.

© 2000 by iDOT.com, Inc. and Biostar Microtech International Corporation. All rights reserved. No part of this document may be reproduced in any form, including translation to another language, without the prior written consent of iDOT.com, Inc.



iDOT.com
1 Chisholm Trail Road, Suite 3200
Round Rock, Texas 78681 USA
512-684-5000
www.idot.com

# Contents


## Welcome 7

Package checklist . . . . . 7
Ordering options and replacement parts . . . . . 8
Contacting iDOT.com . . . . . 8

## 1 Setting UpYour SA Series System 9

Setup quickstart . . . . . 9
Completing SA Series system setup . . . . . 10
Troubleshooting setup problems . . . . . 13
Turning on the computer . . . . . 15
Turning off the computer . . . . . 16

## 2 Working with SA Series System Hardware 19

Removing the chassis cover . . . . . 20
Location of main system components . . . . . 21
Back panel connections . . . . . 22
- Serial port COM1, COM2 . . . . . 23
- Parallel port PRT . . . . . 23
- PS/2 keyboard . . . . . 23
- PS/2 mouse . . . . . 23
- Universal Serial Bus USB1/USB2 . . . . . 23

Installing DIMMs . . . . . 24
Removing DIMMs . . . . . 25
Memory Configuration. . . . . 26
Installing IDE devices (HDD, CD-ROM) . . . . . 29
Installing floppy disk drives . . . . . 29
Installing expansion cards . . . . . 30
Replacing the battery . . . . . 32

## 3 Using the BIOS Setup Utility 33

Using Setup . . . . . 34
Main menu . . . . . 35
Standard CMOS features . . . . . 37
Advanced BIOS features . . . . . 39
Advanced chipset features . . . . . 42
Integrated peripherals . . . . . 44
Power Management Setup . . . . . 48
PnP/PCI configurations . . . . . 52
PC Health Status . . . . . 53
Load optimized defaults . . . . . 58
Set supervisor/user password. . . . . 59
Save and exit setup . . . . . 60
Exit without saving . . . . . 61

## A SA Series System Mainboard 63

Mainboard features . . . . . 64
Mainboard layout . . . . . 65
Front panel connection block (J5) . . . . . 68
Power LED and KeyLock . . . . . 70
Reset . . . . . 70
Speaker . . . . . 70
HDD LED . . . . . 70
Wake-On-LAN (WOL) . . . . . 71
Wake-On-Modem (WOM) . . . . . 71
Infrared (IrDA) . . . . . 72
CPU cooling fan . . . . . 72
Chassis cooling fan . . . . . 73
ATX power supply . . . . . 74
Clear CMOS (JP22) . . . . . 76
Clearing CMOS data or resetting your password . . . . . 76
Multi-I/O addresses . . . . . 77

## B Troubleshooting 79

# Welcome

## Package checklist

In addition to this book, your iDOT.com™ SA Series system package should include the items listed below. If any item is damaged or missing, contact the iDOT.com Customer Service Department at 888-315-9563.

- setup instructions (fold-out poster)
- SA Series computer
- mouse
- keyboard
- power cable
- speakers (if you ordered speakers)
- telephone cord (if you ordered a modem)
- monitor (if you ordered a monitor)
- Microsoft® Windows® documentation, and *Certificate of Authenticity.*

**Note**

Keep your *Certificate of Authenticity* in a safe place. It includes the product ID number, which you will need when you set up your system and in case you ever need to re-install Windows.

## Ordering options and replacement parts

For complete information about options and replacement parts available for your SA Series system, see the iDOT.com Web site: **www.idot.com**.

## Contacting iDOT.com

For the most up-to-date information about your SA Series system and for sales or technical support, go to the iDOT.com Web site at www.idot.com. You can also contact iDOT.com at these numbers:

| | |
|---|---|
| Customer Service | 888-315-9563 |
| Sales | 888-388-4368 |
| Technical Support | 888-316-6302 |

# Setting Up Your SA Series System

1

## Setup quickstart

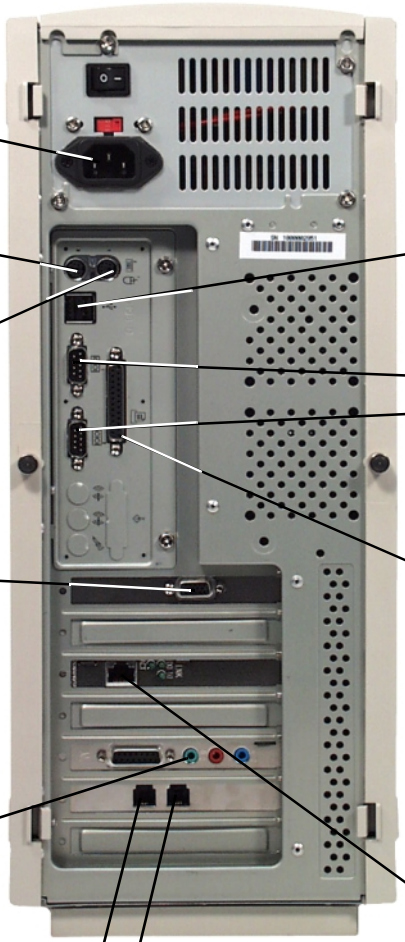

**1** Plug the **power cable** into the back of the computer. Make sure the plug is firmly connected.

**2** Plug in the **keyboard**.

**3** Plug in the **mouse**.

**4** Connect one end of the **monitor** cable to the video port and the other end to the monitor. Plug the monitor into a power outlet.

**5** If your system includes speakers, plug the **speaker** cable into the speaker jack. If your speakers include a power adapter, plug the adapter into a power outlet.

**6** If your system includes a **modem**, connect the telephone cord to the PHONE LINE jack. Connect the other end to the telephone wall jack.

If a phone is connected to the telephone wall jack, unplug the phone from the wall jack and plug it into the modem TELEPHONE jack.

**7** If your system includes an **Ethernet card**, plug the network cable into the Ethernet jack.

**8** If your system includes a **printer**, plug one end of the printer cable into the computer's printer port; plug the other end into the printer. Then plug the printer's power cable into a power outlet.

**9** If you have **serial devices**, connect them to the COM1 or COM2 port.

**10** If you have **USB devices**, connect them to the USB ports.

**11** Follow the instructions on the next page to **finish** setting up your SA Series computer.

# Completing SA Series system setup

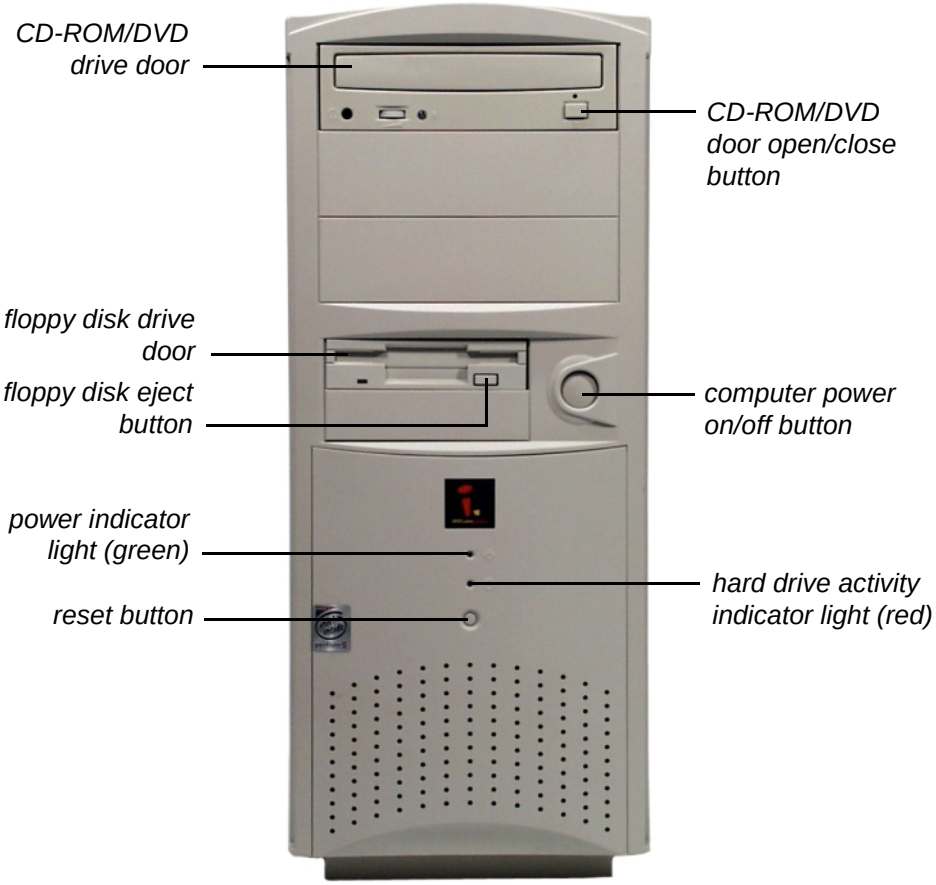

Follow these steps to finish setting up your computer:

1. Make sure all power cables are plugged into power outlets (computer, monitor, printer, modem, etc.).

   ***Notes***

   In order for the computer to be properly grounded, its power cord must be plugged into a grounded outlet, power strip, surge suppressor, or UPS (uninterruptible power supply).

   Although not a requirement, iDOT.com recommends that you plug your equipment into a surge protector or UPS to protect your system from electrical surges. Damage caused by surges or electrical line problems are not covered by your iDOT.com warranty.

2. If your system includes a printer, turn on the printer.

3. Turn on the monitor.

4. If your system includes speakers, turn on the speakers. (The speaker power switch is either on the front or the back of one of the speakers, depending on the type of speakers you have.)

5. Turn on the computer as follows:
   **a.** Make sure no diskettes or CDs are in the computer.
   **b.** Turn on the system's master power switch on the back of the computer (if it is not already on).

*To turn the master power switch ON, press down the side with the — .*

**c.** Press the power on/off button on the front of the computer.

When the computer starts up, the green power indicator light comes on and the computer beeps. After a few moments, a message appears on the monitor asking you to enter your name and company name (if applicable).

**6.** Type your name (and company name), then press the **Enter** key on your keyboard.

The software license agreement screen opens.

**7.** Read the agreement, then use the mouse to click the **I accept** button.

A message appears that asks you to enter the Windows software Product ID (registration) number, which is located on the Microsoft *Software Certificate of Authenticity* attached to the Microsoft Windows setup and installation manual.

**8.** Type the Product ID number, then use the mouse to click the **OK** button.

***Note***

You only need to enter the Product ID number the first time you run Windows or after re-installing Windows.

# Troubleshooting setup problems

### When I turned on the computer, nothing happened even after I waited a couple of minutes.

Make sure the power cable is securely plugged into the back of the computer and into a live AC power source such as a live AC wall outlet, power strip, or surge suppressor.

### When I started the computer, I heard the startup beep, but nothing appears on my screen.

Make sure the monitor's power cable is securely plugged into a live AC power source such as a live AC wall outlet, power strip, or surge suppressor.

Make sure the monitor is turned on. (Most monitors include a small light on the front of the monitor that indicates when the monitor is on.)

Check to be sure the video cable is plugged securely into the video port on the back of the computer. (See page 9.)

Adjust the monitor's Brightness and Contrast by using the controls located on the front of the monitor.

### My mouse and/or keyboard aren't working.

Check to be sure the mouse and/or keyboard are securely plugged into their respective ports. (See page 9.)

**Note:**
*Speakers are optional. Your system may not include speakers.*

### No sound is coming from my speakers.

Make sure that the speakers' audio cable is securely plugged into the speaker jack on the back of the computer (page 9) and into the back of the main speaker (the speaker with the controls).

Verify that the power adapter is plugged into a live AC source such as an AC wall outlet, power strip, or surge suppressor, and that the adapter's cable is plugged securely into the back of the main speaker.

Confirm that the speakers are turned on by pressing the power button on the master speaker. (Your speakers may include an LED light that comes on when the speakers are on.)

Turn the volume control up on the speakers. Check the volume level settings of the Windows **Multimedia Control Panel**. (Refer to the Microsoft Windows setup and installation manual for information about the Multimedia Control Panel.)

***Note:*** *Modems are optional. Your system may not include a modem.*

### My modem won't dial.

Make sure the telephone wall jack you are using is live by plugging a regular telephone into it and listening for a dial tone.

If you hear a dial tone, disconnect the telephone from the wall jack and reconnect the telephone cord to the telephone wall jack and to the modem's **Phone Line** jack (see page 9), making sure the cord is securely plugged into both jacks.

If this still doesn't work, try using a different telephone cord.

### Windows won't load.

Refer to the Microsoft Windows setup and installation manual and the CD that accompanied your computer.

### I have a hardware or Windows problem that hasn't been addressed by any of these troubleshooting techniques.

For iDOT.com hardware or Windows setup questions or problems, call iDOT.com Technical Support at **888-316-6302**.

### Note

The technical support number is for original (iDOT.com) equipment support only. For help installing other hardware or software, contact the manufacturer or vendor of that product.

## Turning on the computer

After you set up your computer, you can use the following procedure from now on each time you turn on the computer:

1. Turn on the printer (if your system includes a printer).
2. Turn on the monitor.
3. Turn on the computer as follows:
   a. Make sure no diskettes or CDs are in the computer.
   b. Turn on the system's master power switch on the back of the computer (if it is not already on).

*To turn the master power switch ON, press down the side with the — .*

   c. Press the power on/off button on the front of the computer.

When the computer starts up, the green power indicator light comes on and the computer beeps.

## Turning off the computer

It is important to follow these steps whenever you turn off the computer:

1. Click the Windows **Start** button (located in the lower left corner of the screen, on the Windows taskbar).

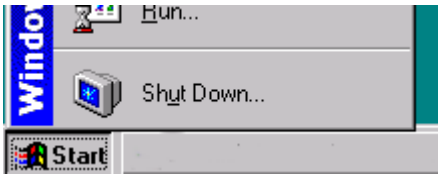


2. Place the cursor over the **Shut Down** option to select it, then click the left mouse button.

   The following dialog box opens:

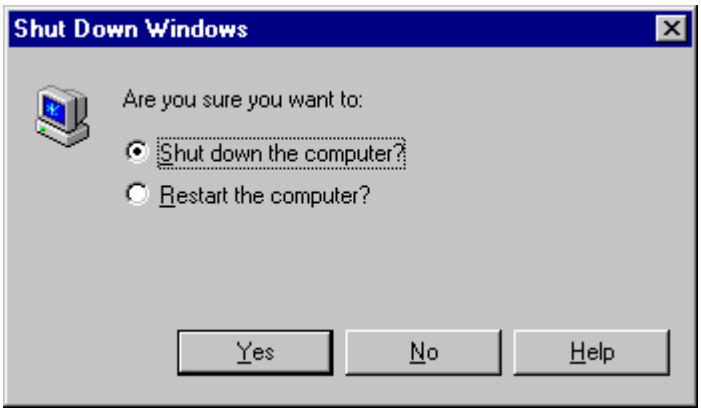


3. With the **Shut down the computer** option selected (as shown in the illustration above), click the **Yes** button to continue the shutdown process.

### Note

See your Windows documentation for information about the other options that may appear in the Shut Down Windows dialog box.

The computer closes each application you have open. Before it closes each application, it gives you the opportunity to save any of that application's files you haven't yet saved.

The computer then shuts down, and the green power indicator light goes out.

### Notes

You do not need to turn off the system's master power switch on the back of the computer.

If the computer does not shut down after you've performed steps 1 – 3 on page 16, press the computer **power on/off button** on the front of the computer to turn off the computer (see page 10).

# Working with SA Series System Hardware

# 2

This chapter provides instructions for changing or upgrading SA Series system hardware.

**Warning**

*Static electricity can damage integrated circuits. Before handling any computer component outside its protective packaging, use one of these methods to discharge static electricity in your body:*

- *After you turn off the main switch on the back of the computer and remove the chassis cover, touch a metal computer component (such as the power supply).*

  *or*

- *Wear a static wrist strap that is connected to a natural earth ground.*

*Do not handle add-on cards by their "gold finger" connectors. Fingers have oils and other contaminants that can prevent connectors from making an electrical connection, which may cause errors or other malfunctions. Handle all system components by their mounting brackets or other edges.*

## Removing the chassis cover

1. Turn off all peripheral devices connected to the system.
2. Turn off the primary power switch on the back of the system.
3. Unplug the system's power cord.

   Follow the steps shown in the illustration:

**6.** Pull the side panel back about ½ inch, then pull the panel out, away from the system.

**4.** Remove screw.

**5.** Press pressure-release tabs.

# Location of main system components

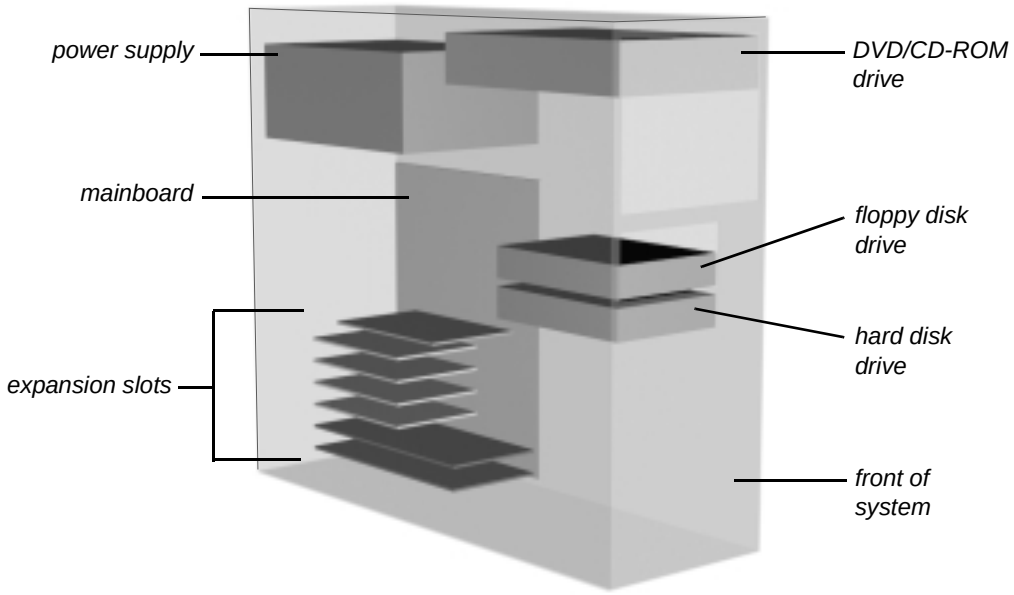

# Back panel connections

When connecting an external device, use the following figure to locate and identify which back panel connector to use.

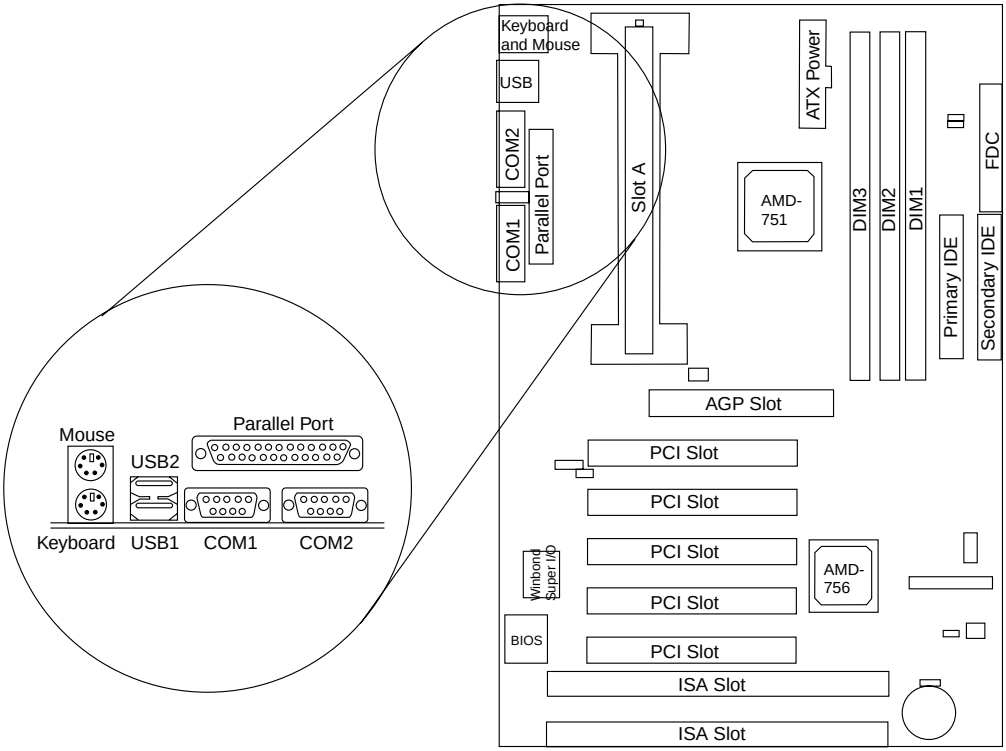

## Serial port COM1, COM2

Plug the serial device cable into the COM1 or COM2 9-pin port located at the rear panel of the mainboard.

## Parallel port PRT

Plug the parallel device cable into the 25-pin port located at the rear panel of the mainboard.

## PS/2 keyboard

Plug the keyboard cable into the 6-pin PS/2 keyboard port located at the rear panel of the mainboard.

## PS/2 mouse

Plug the mouse cable into the 6-pin PS/2 mouse port.

## Universal Serial Bus USB1/USB2

The mainboard includes two USB ports. Plug the USB device cable into USB port USB1 or USB2.

# Installing DIMMs

The mainboard supports three 168-pin 3.3V/5V unbuffered PC100 SDRAM DIMMs from 8 to 256 MB each.

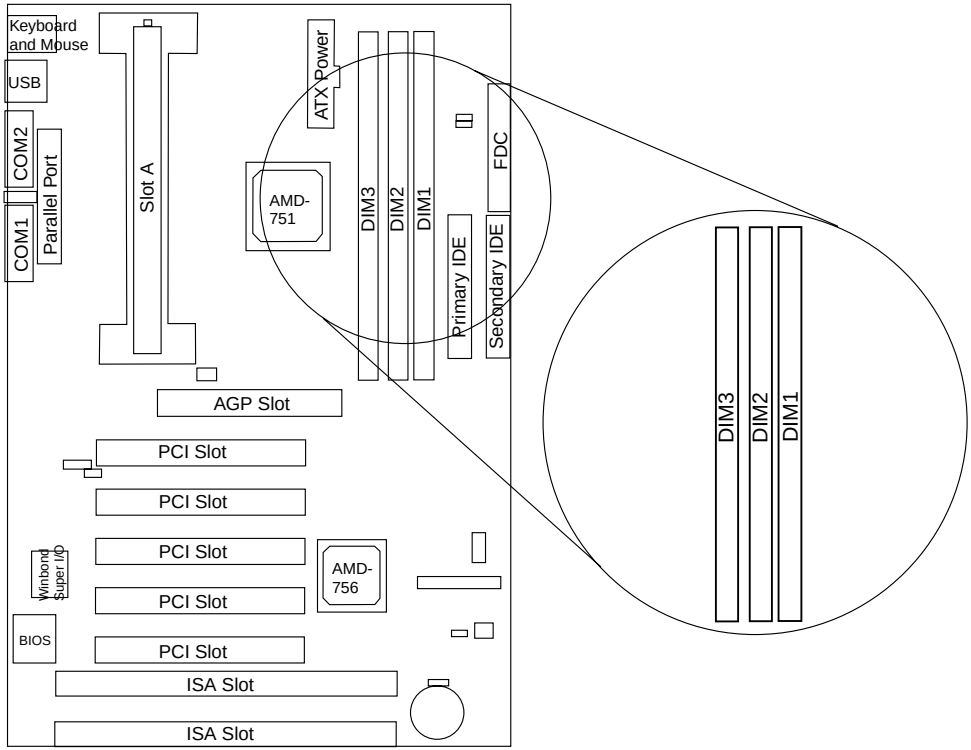


1. Locate the DIMM slots on the mainboard.

2. Use both hands to press the DIMM straight down into the DIMM socket.

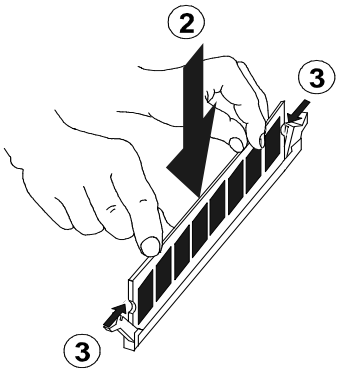


When the DIMM is properly seated, the clips of the socket snap in place to hold the DIMM on either side.

## Removing DIMMs

Gently press down both clips on each side of the DIMM to remove the DIMM.

## Memory Configuration

The mainboard has three DIMM sockets, providing support for up to 768MB of main memory using 3.3V unbuffered PC100 SDRAM DIMM modules from 8MB to 256MB. Refer to the following table to configure SA Series memory.

### Memory Configuration

| Total Memory Size (MB) | Bank 0 DIMM1 | Bank 1 DIMM2 | Bank 2 DIMM3 |
|---|---|---|---|
| 8 | 8 M x 1 pc | — | — |
| 16 | 16 M x 1 pc | — | — |
| 32 | 32 M x 1 pc | — | — |
| 64 | 64 M x 1 pc | — | — |
| 128 | 128 M x 1 pc | — | — |
| 256 | 256 M x 1 pc | — | — |
| 16 | 8 M x 1 pc | 8 M x 1 pc | — |
| 32 | 16 M x 1 pc | 16 M x 1 pc | — |
| 64 | 32 M x 1 pc | 32 M x 1 pc | — |
| 128 | 64 M x 1 pc | 64 M x 1 pc | — |
| 256 | 128 M x 1 pc | 128 M x 1 pc | — |
| 512 | 256 M x 1 pc | 256 M x 1 pc | — |
| 24 | 8 M x 1 pc | 8 M x 1 pc | 8 M x 1 pc |
| 40 | 16 M x 1 pc | 16 M x 1 pc | 8 M x 1 pc |
| 72 | 32 M x 1 pc | 32 M x 1 pc | 8 M x 1 pc |
| 136 | 64 M x 1 pc | 64 M x 1 pc | 8 M x 1 pc |
| 264 | 128 M x 1 pc | 128 M x 1 pc | 8 M x 1 pc |

### Memory Configuration (continued)

| Total Memory Size (MB) | Bank 0 DIMM1 | Bank 1 DIMM2 | Bank 2 DIMM3 |
|---|---|---|---|
| 520 | 256 M x 1 pc | 256 M x 1 pc | 8 M x 1 pc |
| 32 | 8 M x 1 pc | 8 M x 1 pc | 16 M x 1 pc |
| 48 | 16 M x 1 pc | 16 M x 1 pc | 16 M x 1 pc |
| 80 | 32 M x 1 pc | 32 M x 1 pc | 16 M x 1 pc |
| 144 | 64 M x 1 pc | 64 M x 1 pc | 16 M x 1 pc |
| 272 | 128 M x 1 pc | 128 M x 1 pc | 16 M x 1 pc |
| 528 | 256 M x 1 pc | 256 M x 1 pc | 16 M x 1 pc |
| 48 | 8 M x 1 pc | 8 M x 1 pc | 32 M x 1 pc |
| 64 | 16 M x 1 pc | 16 M x 1 pc | 32 M x 1 pc |
| 96 | 32 M x 1 pc | 32 M x 1 pc | 32 M x 1 pc |
| 160 | 64 M x 1 pc | 64 M x 1 pc | 32 M x 1 pc |
| 288 | 128 M x 1 pc | 128 M x 1 pc | 32 M x 1 pc |
| 544 | 256 M x 1 pc | 256 M x 1 pc | 32 M x 1 pc |
| 80 | 8 M x 1 pc | 8 M x 1 pc | 64 M x 1 pc |
| 96 | 16 M x 1 pc | 16 M x 1 pc | 64 M x 1 pc |
| 128 | 32 M x 1 pc | 32 M x 1 pc | 64 M x 1 pc |
| 192 | 64 M x 1 pc | 64 M x 1 pc | 64 M x 1 pc |
| 320 | 128 M x 1 pc | 128 M x 1 pc | 64 M x 1 pc |
| 576 | 256 M x 1 pc | 256 M x 1 pc | 64 M x 1 pc |
| 144 | 8 M x 1 pc | 8 M x 1 pc | 128 M x 1 pc |
| 160 | 16 M x 1 pc | 16 M x 1 pc | 128 M x 1 pc |

### Memory Configuration (continued)

| Total Memory Size (MB) | Bank 0 DIMM1 | Bank 1 DIMM2 | Bank 2 DIMM3 |
|---|---|---|---|
| 192 | 32 M x 1 pc | 32 M x 1 pc | 128 M x 1 pc |
| 256 | 64 M x 1 pc | 64 M x 1 pc | 128 M x 1 pc |
| 384 | 128 M x 1 pc | 128 M x 1 pc | 128 M x 1 pc |
| 640 | 256 M x 1 pc | 256 M x 1 pc | 128 M x 1 pc |
| 272 | 8 M x 1 pc | 8 M x 1 pc | 256 M x 1 pc |
| 288 | 16 M x 1 pc | 16 M x 1 pc | 256 M x 1 pc |
| 320 | 32 M x 1 pc | 32 M x 1 pc | 256 M x 1 pc |
| 384 | 64 M x 1 pc | 64 M x 1 pc | 256 M x 1 pc |
| 512 | 128 M x 1 pc | 128 M x 1 pc | 256 M x 1 pc |
| 768 | 256 M x 1 pc | 256 M x 1 pc | 256 M x 1 pc |

## Installing IDE devices (HDD, CD-ROM)

The mainboard offers two primary and secondary IDE device connectors (IDE1, IDE2). It can support up to four high-speed hard disk drives or CD-ROM drives.

Connect one end of the 40-pin ribbon cable to the IDE device (HDD or CD-ROM). Connect the other end to the primary (IDE1) or secondary (IDE2) directionally keyed IDE connector on the mainboard.

## Installing floppy disk drives

The mainboard can support two floppy disk drives.

The system supports 5 types of floppy disk drives: 720 KB, 1.2 MB, 1.44 MB, 2.88 MB, and LS-120. In addition, the mainboard supports a 3-mode (720KB/1.25MB/1.44MB) floppy commonly used in Japan.

Connect one end of the 34-pin ribbon cable to the floppy disk drive. Plug the other end to the floppy drive connector on the mainboard.

# Installing expansion cards

Your SA Series system includes:

- one 32-bit AGP bus slot
- four dedicated PCI bus slots
- one shared PCI/ISA bus slot
- one dedicated ISA bus slot

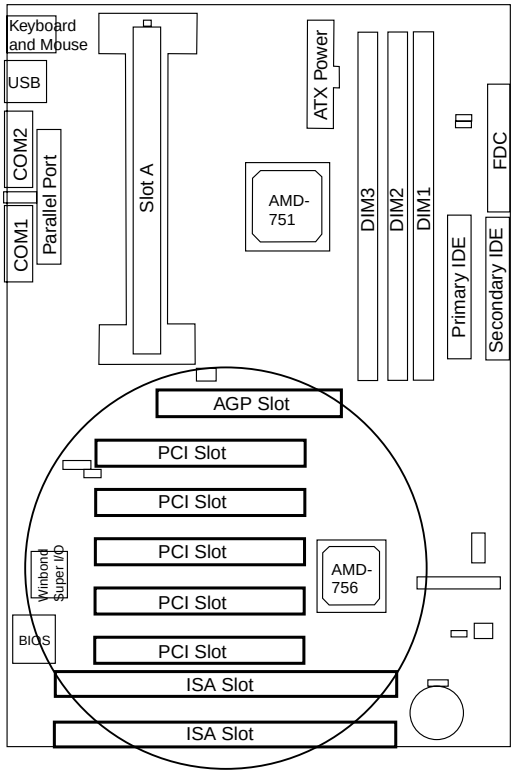

**Caution**

*Turn off the primary system power switch on the back of the computer before installing or removing any device.*

*Observe static electricity precautions. See the warnings on page 19.*

*See "Removing the chassis cover" on page 20.*

1. Remove the chassis cover.
2. Select an empty expansion slot and remove the corresponding slot cover. Keep the slot cover mounting screw nearby.
3. Holding the edge of the expansion card, carefully align the edge connector with the expansion slot.

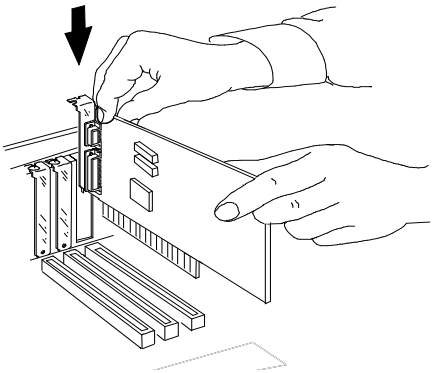

4. Push the card firmly into the slot by pushing down on one end of the card, then the other. Use this rocking motion until the card is firmly seated in the slot.
5. Secure the board with the mounting screw you removed in step 2.
6. Make sure the card has been placed evenly and completely into the expansion slot.

## Replacing the battery

Your SA Series computer uses a 3-volt lithium battery, which should last about seven years. If you need to replace the battery, replace it with an equivalent battery. To purchase a new battery, check a local store such as Radio Shack or Home Depot. Ask for a battery with a part number that includes the identification code *CR2032*.

### Warning

*There is a danger of explosion if you install the wrong battery.*

*Discard used batteries according to the manufacturer's instructions.*

To replace the battery, follow these steps:

1. Observe the precautions described on page 19.
2. Turn off all peripheral devices connected to the system. Turn off the computer's primary power switch on the back of the system.
3. Remove the chassis cover. (See "Removing the chassis cover" on page 20.)
4. Locate the battery on the mainboard. (See the illustration on page 30.)
5. With a medium flat-bladed screwdriver, gently pry the battery out of its socket. Note the orientation of the + and – on the battery.
6. Place the new battery in the socket, orienting the + and – correctly.
7. Replace the chassis cover.

# Using the BIOS Setup Utility

# 3

This chapter discusses the Award™ Setup program built into the ROM BIOS. The Setup program lets you modify the basic system configuration. This information is then stored in battery-backed RAM and retained even when the power is turned off.

The Award BIOS is a custom version of an industry-standard BIOS. The Award BIOS supports AMD Athlon processors. The BIOS provides critical low-level support for devices such as disk drives and serial and parallel ports.

The Award BIOS also includes features such as virus and password protection as well as support for fine-tuning the chipset that controls the entire system.

- Plug and Play—Supports Plug and Play version 1.0A and ESCD (Extended System Configuration Data) write.
- EPA Green PC—Supports version 1.03 of the EPA Green PC specification.
- APM—Supports version 1.1 and 1.2 of the Advanced Power Management (APM) specification. Power management features are implemented via the System Management Interrupt (SMI). Sleep and Suspend power management modes are supported. The BIOS also manages power to the hard disk drives and video monitors.
- PCI Bus—Supports version 2.1 of the Intel PCI (Peripheral Component Interconnect) local bus specification.
- DRAM—Supports SDRAM (Synchronous DRAM).
- CPU—Supports a single AMD Athlon CPU.

# Using Setup

Use the arrow keys to highlight items, press **Enter** to select items, press the **Page Up** and **Page Down** keys to change entries, press **F1** for help, and press **Esc** to quit. The following table provides more detail about how to use the Setup program.

### Setup program navigation keys

| Keystroke | Function |
|---|---|
| Up arrow | Move to previous item. |
| Down arrow | Move to next item. |
| Left arrow | Move to the item on the left (menu bar). |
| Right arrow | Move to the item on the right (menu bar). |
| Esc | Main menu: Quit without saving changes.<br>Submenus: Exit current page to the next higher level menu. |
| Move Enter | Move to an item. |
| Page Up key | Increase the numeric value or make changes. |
| Page Down key | Decrease the numeric value or make changes. |
| + Key | Increase the numeric value or make changes. |
| - Key | Decrease the numeric value or make changes. |
| F1 key | General help on Setup navigation keys |
| F5 key | Load previous values from CMOS. |
| F6 key | Load the fail-safe defaults from BIOS default table. |
| F7 key | Load the optimized defaults. |
| F10 key | Save all the CMOS changes and exit. |

# Main menu

When you enter the Setup utility, the Main menu appears on the screen. Use the arrow keys to select items and press **Enter** to accept and enter the submenu.

CMOS Setup Utility-Copyright (C ) 1984-1999 Award Software

| | |
|---|---|
| Standard CMOS Features | ▶PC Health Status |
| Advanced BIOS Features | Load Optimized Defaults |
| Advanced Chipset Features | Set Supervisor Password |
| Integrated Peripherals | Set User Password |
| Power Management Setup | Save & Exit Setup |
| PnP/PCI Configurations | Exit Without Saving |
| Esc : Quit<br>F10 : Save & Exit Setup | ↑ ↓ → ← : Select Item |
| Time, Date, Hard Disk Type… | |

### Main Menu options

| Option | Description |
|---|---|
| Standard CMOS Features | This setup page includes all the items in a standard compatible BIOS. |
| Advanced BIOS Features | This setup page includes all BIOS special enhanced feature items. |
| Advanced Chipset Features | This setup page includes all chipset special items. |
| Integrated Peripherals | This setup page includes all IDE hard drive and Programmed Input/Output items. |
| Power Management Setup | This setup page includes power management items. |
| PnP/PCI Configurations | This setup page includes IRQ Setting by user definition or by default. |

### Main Menu options (continued)

| Option | Description |
|---|---|
| PC Health Status | Selecting this option displays the PC Health Status screen, which shows voltage and temperature data about your SA Series system. |
| Load Optimized Defaults | Selecting this option changes all BIOS settings from the current settings to settings that provide optimal performance. Allows you to quickly maximize system performance.<br>**Caution:** This option overwrites all custom settings you may have made to the BIOS, as well as all custom settings made by iDOT.com. Using this option can affect the operation of your system. Contact Technical Support before you use this option unless you are an experienced computer user. If you do decide to use this option, record the current BIOS settings before you use it. |
| Set Supervisor Password | Selecting this option enables you to change, set, or disable password. Allows you to limit access to the system and to Setup, or to Setup only. |
| Set User Password | Selecting this option lets you specify both a user and a supervisor password. When you select either password option, you are prompted for a 1- to 6-character password. Enter the password and then retype the password when prompted. |
| Save & Exit Setup | Selecting this option lets you save CMOS value changes you have made and exit Setup. |
| Exit Without Saving | Selecting this option lets you abandon any CMOS value changes you have made and exit Setup. |

# Standard CMOS features

The items on the Standard CMOS Setup menu are divided into 10 categories. Use the arrow keys to highlight the item and then use the **Page Up** or **Page Down** key to select the value you want.

CMOS Setup Utility-Copyright (C ) 1984-1999 Award Software
Standard CMOS Features

| | | Item Help |
|---|---|---|
| Date (mm:dd:yy) | Mon, Jul 5 1999 | |
| Time (hh:mm:ss) | 17 : 38 : 5 | |
| | | Menu Level |
| IDE Primary Master | Press Enter None | |
| IDE Primary Slave | Press Enter None | Change the day, month year and century. |
| IDE Secondary Master | Press Enter None | |
| IDE Secondary Slave | Press Enter None | |
| Drive A | 1.44M, 3.5 in | |
| Drive B | None | |
| Video | EGA/VGA | |
| Halt On | All but Keyboard | |
| Base Memory | XXXX | |
| Extended Memory | XXXX | |
| Total Memory | XXXX | |

## Standard CMOS menu options

| Item | Options | Description |
|---|---|---|
| Date | Month DD YYYY | Set the system date. Note that the day automatically changes when you set the date. |
| IDE Primary Master | Options are in its submenu. | Press **Enter** to display the submenu of detailed options. |
| IDE Primary Slave | Options are in its submenu. | Press **Enter** to display the submenu of detailed options. |
| IDE Secondary Master | Options are in its submenu. | Press **Enter** to display the submenu of detailed options. |
| IDE Secondary Slave | Options are in its submenu. | Press **Enter** to display the submenu of detailed options. |
| Drive A<br>Drive B | None<br>360K, 5.25 in<br>1.2M, 5.25 in<br>720K, 3.5 in<br>1.44M, 3.5 in<br>2.88M, 3.5 in | Select the type of floppy disk drive installed in your system. |
| Video | EGA/VGA<br>CGA 40<br>CGA 80<br>MONO | Select the default video device. |
| Halt On | All Errors<br>No Errors<br>All, but Keyboard<br>All, but Diskette<br>All, but Disk/Key | Select the situation in which you want the BIOS to stop the POST process and notify you. |
| Base Memory | N/A | Displays the amount of conventional memory detected during boot up. |
| Extended Memory | N/A | Displays the amount of extended memory detected during boot up. |
| Total Memory | N/A | Displays the total memory available in the system. |

# Advanced BIOS features

| | | |
|---|---|---|
| Virus Warning | Disabled | |
| External Cache | Enabled | Item Help |
| First Boot Device | Floppy | Menu Level |
| Second Boot Device | HDD-0 | |
| Third Boot Device | LS/ZIP | Allows you to choose the VIRUS warning feature for IDE Hard Disk boot sector protection. If this function is enabled and someone attempts to write data into this area, BIOS will show a warning message on screen and alarm beep |
| Boot Other Device | Enabled | |
| Swap Floppy Drive | Disabled | |
| Boot Up Floppy Seek | Disabled | |
| Boot Up NumLock Status | Off | |
| Security Option | Setup | |
| OS Select For DRAM > 64MB | Non-OS2 | |
| Video BIOS Shadow | Enabled | |
| C8000-CBFFF Shadow | Disabled | |
| CC000-CFFF Shadow | Disabled | |
| D0000-D3FFF Shadow | Disabled | |
| D4000-D7FFF Shadow | Disabled | |
| D8000-DBFFF Shadow | Disabled | |
| DC000-DFFFF Shadow | Disabled | |

## Advanced BIOS options

| Item | Description | Options |
|---|---|---|
| Virus Warning | Allows you to choose the Virus Warning feature for IDE hard disk boot sector protection. If this function is enabled and someone attempts to write data into this area, BIOS shows an onscreen warning message and an alarm beeps. | Disabled (default)<br>No warning message appears when anything attempts to access the boot sector or hard disk partition table.<br><br>Enabled<br>Activates automatically when the system boots up causing a warning message to appear when anything attempts to access the boot sector of hard disk partition table. |
| External Cache | These fields allow you to enable or disable the CPU's Level 2 secondary cache. Caching allows better performance. | Enabled (default)<br>Enable cache.<br><br>Disabled<br>Disable cache. |
| First/Second/Third/Boot Other Device | The BIOS attempts to load the operating system from the devices in the sequence selected. | Floppy, LS/ZIP, HDD SCSI, CDROM, Enabled |
| Swap Floppy Drive | If the system has two floppy drives, you can swap the logical drive name assignments. | Enabled, Disabled (default) |
| Boot Up Floppy Seek | Seeks disk drives during boot up. Disabling speeds boot-up. | Enabled, Disabled (default) |
| Boot Up NumLock Status | Select power on state for NumLock. | **On**<br>Numpad is number keys.<br><br>**Off** (default)<br>Numpad is arrow keys. |

### Advanced BIOS options (continued)

| Item | Description | Options |
|---|---|---|
| Security Option | This category allows you to limit access to the system and Setup, or just to Setup. | System<br>The system will not boot. Access to Setup is denied if the correct password is not entered at the prompt.<br><br>Setup (default)<br>The system will boot, but access to Setup is denied if the correct password is not entered at the prompt. |
| OS Select For DRAM > 64MB | Select the operating system that is running with greater than 64MB of RAM on the system. | Non-OS2 (default), OS2 |
| Video BIOS Shadow | Determines whether video BIOS will be copied to RAM for faster execution. | Enabled (default)<br>Optional ROM is enabled.<br><br>Disabled<br>Optional ROM is disabled. |
| C8000 – CFFFF Shadow/ D0000 - DFFFF Shadow | Determines whether the optional ROM will be copied to RAM for faster execution. | Enabled<br>Optional ROM is shadowed.<br><br>Disabled (default)<br>Optional ROM is not shadowed.<br><br>**Note:** For C8000 - DFFFF option - ROM on PCI BIOS, BIOS automatically enables the shadow RAM. You do not have to select the item. |

# Advanced chipset features

This menu enables you to configure the system based on the specific features of the installed chipset. The chipset manages bus speeds and access to system memory resources, such as DRAM and the external cache. It also coordinates communications between the conventional ISA bus and the PCI bus.

### Note

These items should never need to be altered. The default settings have been chosen because they provide the best operating conditions for your system. The only time you might consider making any changes would be if you discovered that data was being lost while using your system.

CMOS Setup Utility-Copyright (C ) 1984-1999 Award Software
Advanced Chipset Features

| | | Item Help |
|---|---|---|
| System BIOS Cacheable | Enabled | |
| Memory Hole At 15M-16M | Disabled | |
| AGP Aperture Size (MB) | 128 | Menu Level ▶ |
| K7 CLK_CTL Select | Optimal | |
| SDRAM ECC Setting | Disabled | |

## Advanced chipset options

| Item | Description | Options |
|---|---|---|
| System BIOS Cacheable | Selecting **Enabled** allows caching of the system BIOS ROM at F0000h-FFFFFh, resulting in better system performance. However, if any program writes to this memory area, a system error may result. | Enabled (default), Disabled |
| Memory Hole At 15M-16M | You can reserve this area of system memory for ISA adapter ROM. When this area is reserved, it cannot be cached. The documentation included with your peripheral devices may include the devices' memory requirements. | Enabled, Disabled (default) |
| AGP Aperture Size (MB) | This option determines the effective size of the graphics aperture used in the particular PAC configuration. The AGP aperture is memory-mapped, while graphics data structure can reside in a graphics aperture. The aperture range should be programmed as not cacheable in the processor cache, accesses with the aperture range are forwarded via a translation table that is maintained on the main memory. | 4MB, 8MB, 16MB, 32MB, 64MB, 128MB, or 256MB |
| K7 CLK_CTL Select | Set K7 clock ramp rate according to system clock multiplier and the system bus speed. | Default, Optimal (default) |

### Advanced chipset options (continued)

| Item | Description | Options |
|---|---|---|
| SDRAM ECC Setting | When **Enabled** is selected, the system allows a detection of single-bit and multiple-bit errors and recovery of single-bit errors. | Enabled, Disabled (default) |

## Integrated peripherals

CMOS Setup Utility-Copyright (C ) 1984-1999 Award Software
Integrated Peripherals

| | | Item Help |
|---|---|---|
| IDE Primary Master PIO | Auto | Menu Level |
| IDE Primary Slave PIO | Auto | |
| IDE Secondary Master PIO | Auto | |
| IDE Secondary Slave PIO | Auto | |
| IDE Primary Master UDMA | Auto | |
| IDE Primary Slave UDMA | Auto | |
| IDE Secondary Master UDMA | Auto | |
| IDE Secondary Slave UDMA | Auto | |
| On-Chip Primary PCI IDE | Enabled | |
| On-Chip Secondary PCI IDE | Enabled | |
| USB Host Controller | Enabled | |
| USB Keyboard Support | Disabled | |
| Init Display First | PCI Slot | |
| Onboard FDC Controller | Enabled | |
| Onboard Serial Port 1 | 3F8/IRQ4 | |
| Onboard Serial Port 2 | 2F8/IRQ3 | |
| Onboard IR Controller | Disabled | |
| UART Mode Select | Normal | |
| UART2 Duplex Mode | Half | |
| RxD, TxD Active | Lo, Lo | |
| X IR Transmission delay | Enabled | |
| Onboard Parallel Port | 378/IRQ7 | |
| Parallel Port Mode | SPP | |
| X ECP Mode Use DMA | 3 | |
| X EPP Mode Select | EPP 1.7 | |

### Integrated Peripherals options

| Item | Description | Options |
|---|---|---|
| IDE Primary / Secondary Master / Slave PIO | The IDE PIO (Programmed Input / Output) fields let you set a PIO mode (0-4) for each IDE device the onboard IDE interface supports. Modes 0 through 4 provide successively increased performance. In **Auto** mode, the system automatically determines the best mode for each device. | • Auto (default)<br>• Mode0<br>• Mode1<br>• Mode2<br>• Mode3<br>• Mode4 |
| IDE Primary / Secondary Master / Slave UDMA | Ultra DMA/33 implementation is possible only if your IDE hard drive supports it and the operating environment includes a DMA drive (Windows 95 OSR2 or a third-party IDE bus master driver). If your hard drive and your system software both support Ultra DMA/33, select **Auto** to enable BIOS support. | Auto (default), Disabled |
| On-Chip Primary / Secondary PCI IDE | The integrated peripheral controller contains an IDE interface with support for two IDE channels. Select **Enabled** to activate each channel separately. | Enabled (default), Disabled |
| USB Host Controller | Select **Enabled** if your system contains a Universal Serial Bus (USB) controller and you have USB peripherals. | Enabled (default), Disabled |
| USB Keyboard Support | Select **Enabled** if your system contains a Universal Serial Bus (USB) controller and you have a USB keyboard. | Enable, Disabled (default) |
| Init Display First | Specifies whether the PCI slot or the AGP slot will be activated first. | PCI Slot (default), AGP |
| Onboard FDC Controller | Select **Enabled** if your system has a floppy disk controller (FDC) installed on the system board that you want to use. If installation uses FDC or the system has no floppy drive, select **Disabled**. | Enabled (default), Disabled |

### Integrated Peripherals options (continued)

| Item | Description | Options |
|---|---|---|
| Onboard Serial Port 1/ Port 2 | Select an address and corresponding interrupt for the first and second serial ports. | • Disabled<br>• Auto<br>• 3F8/IRQ4<br>• 2F8/IRQ3<br>• 3E8/ IRQ4<br>• 2E8 / IRQ3 |
| Onboard IR Controller | The system has an on-board Super I/O chip with an IR controller. Choose **Enabled** to use the on-board IR controller for accessing the IR devices. Otherwise choose **Disabled** to use the off-board IR controller. | Enabled/Disabled |
| UART Mode Select | Determines the Infra Red (IR) function of onboard I/O chip. | • IrDA<br>• ASKIR<br>• Normal (default) |
| UART2 Duplex Mode | Select the value required by the IR device connected to the IR port. Full-duplex mode permits simultaneous two-direction transmission. Half-duplex mode permits transmission in one direction only at a time. | Full, Half (default) |
| RxD, TxD Active | Determines the active of RxD, TxD. | • Hi, Hi<br>• Hi, Lo<br>• Lo, Hi<br>• Lo, Lo (default) |
| IR Transmission delay | Enables or disables IR transmission delay. | Enabled (default), Disabled |
| Onboard Parallel Port | Determines access onboard parallel port controller with which I/O address. | |

### Integrated Peripherals options (continued)

| Item | Description | Options |
|---|---|---|
| Parallel Port Mode | Select an operating mode for the onboard parallel (printer) port. | • Normal EPP (Extended Parallel Port)<br>• ECP (Extended Capabilities Port)<br>• ECP+EPP PC AT parallel port<br>• Bidirectional Port Fast buffered port<br>• Fast, buffered Bidirectional Port.<br><br>Select **Normal** unless you are certain your hardware and software both support EPP or ECP mode. |
| ECP Mode Use DMA | Select a DMA channel for the parallel port for use during ECP mode. | 3 (default), 1 |
| EPP Mode Select | Determines the IR transfer mode of onboard I/O chip. | EPP1.9, EPP1.7 (default) |

# Power Management Setup

The Power Management Setup menu enables you to configure your system to most effectively save energy while operating in a manner consistent with your own style of computer use.

CMOS Setup Utility-Copyright (C ) 1984-1999 Award Software
Power Management Setup

| | | | Item Help |
|---|---|---|---|
| | APCI function | Enabled | |
| | Power Management | User Define | |
| | Video Off Method | V/H SYNC+Blank | Menu Level |
| | Suspend Type | PwrOn Suspend | |
| | Standby Mode | Disabled | |
| | HDD Power Down | Disabled | |
| | HDD Down In Suspend | Disabled | |
| | Soft-Off by PBTN | Instant-Off | |
| | RI Resume/WOL | Disabled | |
| | MODEM Use IRQ | 3 | |
| | RTC Resume | Disabled | |
| X | Date (of Month) Alarm | 0 | |
| X | Time (hh:mm:ss) Alarm | 0 0 0 | |
| | Primary IDE 0 | Enabled | |
| | Primary IDE 1 | Enabled | |
| | Secondary IDE 0 | Enabled | |
| | `Secondary IDE 1 | Enabled | |
| | Parallel Port | Disabled | |
| | Serial Port | Disabled | |
| | IRQ3 (COM 2) | Disabled | |
| | IRQ4 (COM 1) | Disabled | |
| | IRQ5 (LPT 2) | Disabled | |
| | IRQ6 (Floppy Disk) | Disabled | |
| | IRQ7 (LPT 1) | Disabled | |
| | IRQ8 (RTC Alarm) | Disabled | |
| | IRQ9 (IRQ2 Redir) | Disabled | |
| | IRQ10 (Reserved) | Disabled | |
| | IRQ11 (Reserved) | Disabled | |
| | IRQ12 (RS/2 Mouse) | Disabled | |
| | IRQ13 (Coprocessor) | Disabled | |
| | IRQ14 (Hard Disk) | Disabled | |
| | IRQ15 (Reserved) | Disabled | |

## Power Management options

| Item | Description | Options |
|---|---|---|
| ACPI function | Enables/disables the Advanced Configuration and Power Management (ACPI). | Enabled (default), Disabled |
| Power Management | Select the type (or degree) of power saving, directly related to the following modes:<br>• HDD Power Down.<br>• Doze Mode.<br>• Suspend Mode.<br>There are four selections for Power Management, three of which have fixed mode settings | • Min. Power Saving<br>Minimum power management. Doze Mode = 1 hr. Standby Mode = 1 hr., Suspend Mode = 1 hr., and HDD Power Down = 15 min.<br>• Max. Power Saving<br>Maximum power management—ONLY AVAILABLE FOR SL CPUs. Doze Mode = 1 min., Standby Mode = 1 min., Suspend Mode = 1 min., and HDD Power Down = 1 min.<br>• User Defined (default)<br>Allows you to set each mode individually. When not disabled, each of the ranges are from 1 min. to 1 hr. except for HDD Power Down which ranges from 1 min. to 15 min. and disable. |
| Video Off Method | Determines the way in which the monitor is blanked. | • V/H SYNC+Blank (default)<br>Causes the system to turn off the vertical and horizontal synchronization ports and write blanks to the video buffer.<br>• Blank Screen<br>Writes blanks to the video buffer.<br>• DPMS<br>Initial display power management signaling. |
| Suspend Type | Select the suspend type. | PwrOn Suspend (default), Stop Grant |
| Standby Mode | When enabled and after the set time of system inactivity, all devices except the CPU shut off. | Disabled (default), Enabled |

### Power Management options (continued)

| Item | Description | Options |
|---|---|---|
| HDD Power Down | When enabled and after the set time of system inactivity, the hard disk drive powers down while all other devices remain active. | Disabled (default), Enabled |
| HDD Down In Suspend | Allows you to decide to power down in suspend. | Disabled (default), Enabled. |
| Soft-Off by PWR-BTTN | Pressing the power button for more than 4 seconds forces the system to enter the Soft-Off state when the system has hung. | Delay 4 Sec, Instant-Off (default) |
| RI Resume/WOL | This function requires a LAN add-on card that supports power-on functions. It also support the wake-up LAN jumper. | Enabled, Disabled (default). |
| MODEM Use IRQ | Determines the IRQ, which can be applied in MODEM use. | **3** is (default)<br>4 / 5 / 7 / 9 / 10 / 11 / NA |
| RTC Resume | When this option is enabled, you can set the date and time at which the RTC (real-time clock) alarm awakens a system that has been powered down. | Enabled, Disabled (default). |
| Date (of Month) /Time (hh:mm:ss) | Sets the date (of month) and timer (hh:mm:ss), any event occurring at the set date/time awakens a system that has been powered down. | |
| Primary IDE 0/1 | The default value is Enabled. | • Disabled<br>Disable this function.<br>• Enabled (default)<br>Enable monitor Primary IDE 0/1 for Green event. |

**Power Management options (continued)**

| Item | Description | Options |
|---|---|---|
| Secondary IDE 0/1 | The default value is Enabled. | • Disabled<br>Disable this function.<br>• Enabled (default)<br>Enable monitor Secondary IDE 0/1 for green event. |
| Parallel Port | The default value is Disabled. | • Disabled (default)<br>Disable this function.<br>• Enabled<br>Enable monitor parallel port for green event. |
| Serial Port | The default value is Disabled. | • Disabled (default)<br>Disable this function.<br>• Enabled<br>Enable monitor Serial Port for Green event. |
| IRQ3 – IRQ15 | The following is a list of IRQ, Interrupt ReQuests, which can be exempted much as the COM ports and LPT ports above. When an I/O device wants the attention of the operating system, it signals this by causing an IRQ to occur. When the operating system is ready to respond to the request, it interrupts itself and performs the service.<br><br>When set to Disable, activity neither prevents the system from going into a power management mode nor awakens it. | • IRQ3 (COM 2)<br>• IRQ4 (COM 1)<br>• IRQ5 (LPT 2)<br>• IRQ6 (Floppy Disk)<br>• IRQ7 (LPT 1)<br>• IRQ8 (RTC Alarm)<br>• IRQ9 (IRQ2 Redir)<br>• IRQ10 (Reserved)<br>• IRQ11 (Reserved)<br>• IRQ12 (PS/2 Mouse)<br>• IRQ13 (Coprocessor)<br>• IRQ14 (Hard Disk)<br>• IRQ15 (Reserved) |

# PnP/PCI configurations

This section describes configuring the PCI bus system. This section covers some very technical items and it is strongly recommended that only experienced users make any changes to the default settings.

CMOS Setup Utility-Copyright (C ) 1984-1999 Award Software
Pnp/PCI Configurations

| | | Item Help |
|---|---|---|
| PNP OS Installed | No | Menu Level |
| Reset Configuration Data | Disabled | |
| Resources Controlled By | Auto (ESCD) | Select Yes if you are using a Plug and Play capable operating system. Select No if you need the BIOS to configure non-boot devices |
| IRQ Resources | Press Enter | |
| DMA Resources | Press Enter | |
| PCI/VGA Palette Snoop | Disabled | |

# PC Health Status

CMOS Setup Utility-Copyright (C ) 1984-1999 Award Software
PC Health Status

| | | |
|---|---|---|
| CPU Warning Temperature | x ./ x . | Item Help |
| Current System Temp. | x ./ x . | |
| Current CPU1 Temperature | x ./ x . | Menu Level |
| Current CPUFAN1 Speed | x RPM | |
| Current CPUFAN2 Speed | x RPM | |
| IN0 (V) | x V | |
| IN1 (V) | x V | |
| + 5 V | x V | |
| +12 V | x V | |
| -12 V | - x V | |
| - 5 V | - x V | |
| VBAT (V) | x V | |
| Shutdown Temperature | 75./167. | |
| Show H/W Monitor in Post | 3 sec | |

## PnP/PCI configuration

| Item | Description | Options |
|---|---|---|
| PNP OS Installed | When set to YES, BIOS will initialize only the PnP cards used for booting (VGA, IDE, SCSI). The rest of the cards will be initialized by the PnP operating system such as Windows 95. When set to NO, BIOS will initialize all the PnP cards. Therefore for non-PnP operating systems (DOS, Netware™), this option must set to NO. | |
| Reset Configuration Data | If enabled, resets the Extended System Configuration Data (ESCD) when Setup is exited. This may correct hardware conflicts that prevent the operating system from booting. | IRQ-3assigned to: PCI / ISA PnP<br>IRQ-4assigned to: PCI / ISA PnP<br>IRQ-5assigned to: PCI / ISA PnP<br>IRQ-7assigned to: PCI / ISA PnP<br>IRQ-9assigned to: PCI / ISA PnP<br>IRQ-10assigned to: PCI / ISA PnP<br>IRQ-11assigned to: PCI / ISA PnP<br>IRQ-12assigned to: PCI / ISA PnP<br>IRQ-14assigned to: PCI / ISA PnP<br>IRQ-15assigned to: PCI / ISA PnP<br>DMA-0assigned to: PCI / ISA PnP<br>DMA-1assigned to: PCI / ISA PnP<br>DMA-3assigned to: PCI / ISA PnP<br>DMA-5assigned to: PCI / ISA PnP<br>DMA-6assigned to: PCI / ISA PnP<br>DMA-7assigned to: PCI / ISA PnP<br><br>The above settings will be shown on the screen only if **Manual** is chosen for the resources controlled by function.<br><br>**Legacy** signifies that a resource is assigned to the ISA bus and provides for non-PnP ISA add-on cards.<br>PCI / ISA PnP signifies that a resource is assigned to the PCI bus or provides for ISA PnP add-on cards and peripherals. |

### PnP/PCI configuration (continued)

| Item | Description | Options |
|---|---|---|
| Resources Controlled By | Auto (default) causes the system BIOS to detect system resources and automatically assign the relative IRQ and DMA channel for each peripheral.<br>If Manual is selected, you must assign IRQ and DMA for add-on cards. Be sure that there are no IRQ/DMA and I/O port conflicts. | Auto (default), Manual |
| IRQ Resources | When resources are controlled manually, assign each system interrupt a type, depending on the type of device using the interrupt. | |
| DMA Resources | When resources are controlled manually, assign each system DMA channel a type, depending on the type of device using the DMA channel. | |

## PnP/PCI configuration (continued)

| Item | Description | Options |
|---|---|---|
| PCI / VGA Palette Snoop | Some graphic controllers that are not VGA compatible take the output from a VGA controller and map it to their display as a way to provide boot information and VGA compatibility.<br><br>However, the color information coming from the VGA controller is drawn from the palette table inside the VGA controller to generate the proper colors, and the graphic controller needs to know what is in the palette of the VGA controller. To do this, the non-VGA graphic controller watches for the Write access to the VGA palette and registers the snoop data. In PCI based systems, where the VGA controller is on the PCI bus and a non-VGA graphic controller is on an ISA bus, the Write Access to the palette will not show up on the ISA bus if the PCI VGA controller responds to the Write.<br><br>In this case, the PCI VGA controller should not respond to the Write, it should only snoop the data and permit the access to be forwarded to the ISA bus. The non-VGA ISA graphic controller can then snoop the data on the ISA bus. Unless you encounter the above situation, you should disable this option. | • Disabled (default)<br>Disables the function.<br>• Enabled<br>Enables the function. |

## PC Health Status options

| Item | Description | Options |
|---|---|---|
| CPU Warning Temperature | Select the CPU warning temperature. If your CPU temperature is higher than the selected temperature, the BIOS will slow down your CPU process until the temperature is below the CPU warning temperature then the CPU will work normally. | |
| Current System Temp. | This field displays the *current* system temperature, if your computer contains a monitoring system. | |
| Current CPU1 Temperature | This field displays the *current* CPU temperature, if your computer contains a monitoring system. | |
| Current CPUFAN1/2 Speed | These fields display the current speed of up to three CPU fans, if your computer contains a monitoring system. | |
| IN0 / IN1 | These fields display the current voltage of up to seven voltage input lines, if your computer contains a monitoring system. | |
| Current CPU Vcore ±5V, ±12V, VBAT | Detect system's voltage status automatically. | |
| Shutdown Temperature | Select the shutdown temperature. | 75/167 (default) |
| Show H/W Monitor in Post | If you computer contains a monitoring system, it will show PC health status during POST stage. Select the delay time you want. | 3 set (default) |

# Load optimized defaults

When you press **Enter** on this item, a confirmation dialog box is displayed:

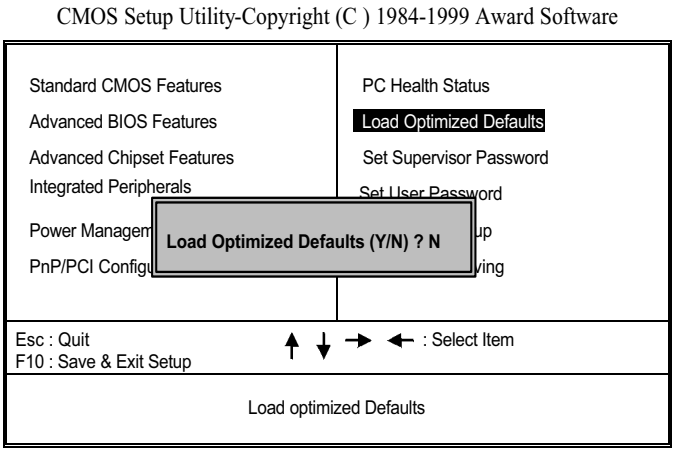


Pressing **Y** loads the default values that are factory settings for optimal performance system operations.

# Set supervisor/user password

When you select this function, the following message appears at the center of the screen to assist you in creating a password.

CMOS Setup Utility-Copyright (C ) 1984-1999 Award Software

| | |
|---|---|
| Standard CMOS Features | PC Health Status |
| Advanced BIOS Features | Load Optimized Defaults |
| Advanced Chipset Features | Set Supervisor Password |
| Integrated Peripherals | Set User Password |
| Power Management | |
| PnP/PCI Configura | g |

Enter Password :

Esc : Quit ↑ ↓ → ← : Select Item
F10 : Save & Exit Setup

Change/Set/Disable password

### ENTER PASSWORD

Type the password, up to eight characters, and press **Enter**. The password you type now will clear any previously entered password from CMOS memory. You will be asked to confirm the password. Type the password again and press **Enter**.

To abort the selection and not enter a password, press **Esc**.

To disable password, press **Enter** when you are prompted to enter the password. A message will confirm that you want to disable the password. Once the password is disabled, the system will boot and you are able to enter Setup.

### PASSWORD DISABLED

If you select **System** at the Security Option of BIOS Features Setup menu, you are prompted for the password every time the system is rebooted, or any time you try to enter Setup. If you select **Setup** at the Security Option of BIOS Feature Setup menu, you are prompted only when you try to enter Setup.

## Save and exit setup

CMOS Setup Utility-Copyright (C ) 1984-1999 Award Software

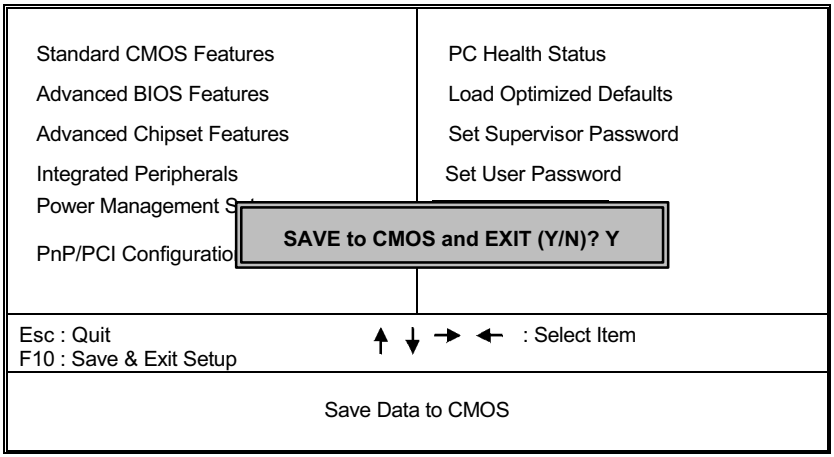


Type **Y** to quit the Setup Utility and save the user setup values to RTC CMOS RAM.

Type **N** to return to the Setup utility.

# Exit without saving

CMOS Setup Utility-Copyright (C ) 1984-1999 Award Software

| | |
|---|---|
| Standard CMOS Features | PC Health Status |
| Advanced BIOS Features | Load Optimized Defaults |
| Advanced Chipset Features | Set Supervisor Password |
| Integrated Peripherals | Set User Password |
| Power Management Setup | Save & Exit Setup |
| PnP/PCI Cont | Saving |
| Esc : Quit<br>F10 : Save & Exit Setup | : Select Item |
| Abandon all Datas | |

**Quit without Saving (Y/N)? N**

Type **Y** to quit the Setup utility without saving values to RTC CMOS RAM.

Type **N** to return to the Setup utility.

# SA Series System Mainboard

# A

This appendix lists the mainboard's features, and describes how to change mainboard settings.

**Warning**

*Static electricity can damage integrated circuits. Before handling any computer component outside its protective packaging, use one of these methods to discharge static electricity in your body:*

*After you turn off the main switch on the back of the computer and remove the chassis cover, touch a metal computer component (such as the power supply).*

*or*

*Wear a static wrist strap that is connected to a natural earth ground.*

*Do not handle add-on cards by their "gold finger" connectors. Fingers have oils and other contaminants that can prevent connectors from making an electrical connection, which may cause errors or other malfunctions. Handle all system components by their mounting brackets or other edges.*

## Mainboard features

- CPU
  - Supports single slot-A for AMD® Athlon™ processor module, 500MHz and faster.
  - Supports 200MHz front side bus system interface speed.
  - On-board 128K L1 cache
  - 512K L2 backside cache
- DRAM controller
  - Supports three 168-pin 3.3V unbuffered PC100 SDRAM DIMMs.
  - Three 168-pin DIMM banks support 8/16/32/64/128/256 MB unbuffered DIMMs.
  - System memory: 8MB to 768MB with SDRAM
- Bus speeds
  - Supports 33MHz PCI bus speed.
  - I/O clock 8MHz for ISA bus.
  - Supports 66MHz/133MHz AGP bus.
- Bus slots
  - Provides two 16-bit ISA bus slots, five PCI bus slots, and one AGP bus slot.
- "Green" features
  - Supports power management operation via BIOS.
  - Power-down timer from 1 to 15 minutes.
  - Wakes from power-saving sleep mode at the press of any key or at any mouse activity.

# Mainboard layout

The following diagram shows the layout of the SA Series mainboard. Each feature is described in the table on the next page.

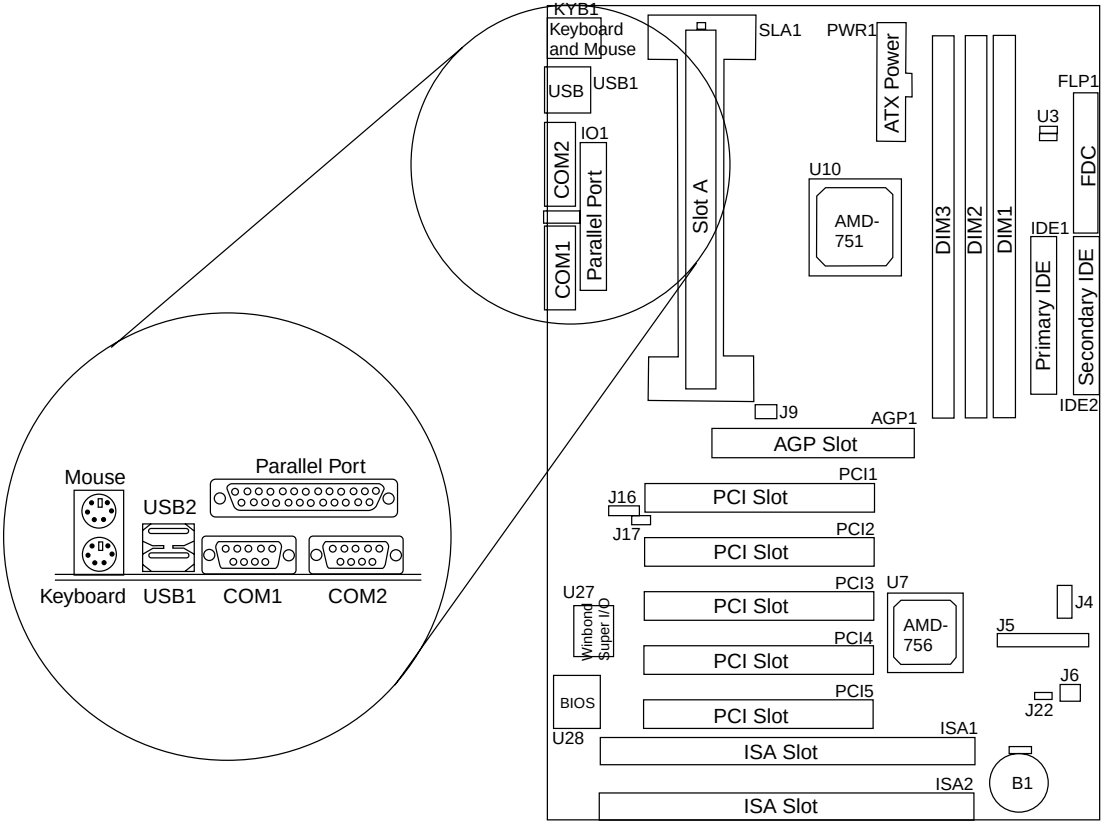

## Mainboard features

| Component | Description |
|---|---|
| Slot A (SLA) | Socket for AMD Athlon CPU with host bus frequency of 200 MHz. |
| chipset (U10) | AMD 750 PCI/AGP bus chipset |
| ATX Power (PWR1) | 20-pin male connector |
| CPU fan (J9) | 3-pin CPU cooling fan connector |
| chassis fan (J6) | 3-pin chassis cooling fan connector |
| DIMM banks (DIM1, DIM2, and DIM3) | 168-pin unbuffered 3.3V PC100 SDRAM DIMMs<br>• Supports 8~256MB DIMM in each bank<br>• Supports ECC configuration |
| BIOS (U28) | System BIOS built-in, Award BIOS<br>• APM, ACPI and Plug-and-Play function<br>• Supports multiple-boot function<br>• DMI utility |
| PCI slots (PCI1 – PCI5) | 5 x 32-bit bus mastering slots |
| ISA slots (ISA1, ISA2) | 2 x 16-bit ISA slots |
| IDE connectors (IDE1, IDE2) | 2 x 40-pin bus mastering E-IDE/ATAPI ports; supports Ultra DMA/33<br>• IDE1: primary IDE device connector<br>• IDE2: secondary IDE device connector |
| floppy drive connector (FLP1) | Floppy disk drive (FDD) port (Supports 1.2MB/ 1.44MB/2.88MB and LS120/3-mode FDD.) |
| J17 | 3-pin WOL (Wake-On-LAN) connector |
| J16 | 5-pin WOM (Wake-On-Modem) connector |
| J22 | CMOS function jumper |

### Back panel features

| | |
|---|---|
| parallel port | 25-pin female parallel printer port |
| COM1, COM2 | RS-232 serial ports |
| PS/2 KB | PS/2 keyboard port |
| PS/2 Mouse | PS/2 mouse port |
| USB1, USB2 | USB (Universal Serial Bus) ports |

# Front panel connection block (J5)

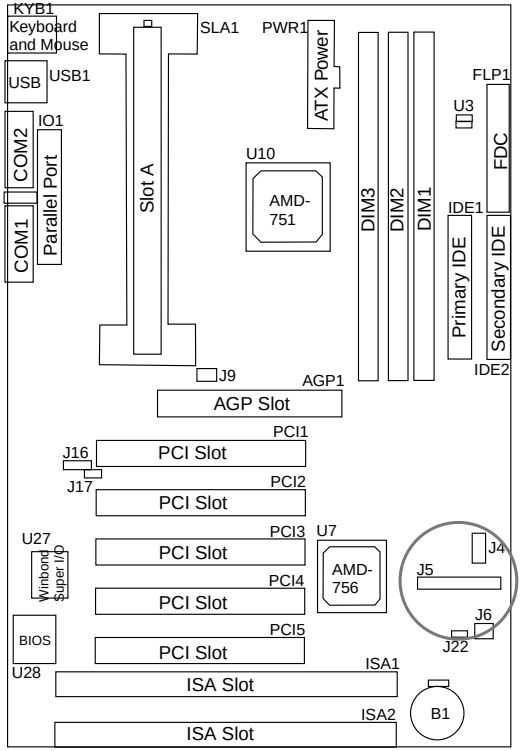


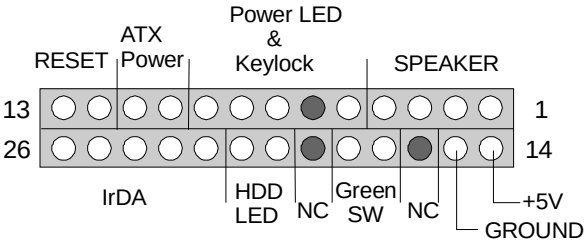

| Pin No. | Assignment | Function | Pin No. | Assignment | Function |
|---|---|---|---|---|---|
| 1 | speaker | speaker connector | 14 | ±5V | VCC ground |
| 2 | NC | | 15 | ground | |
| 3 | ground | | 16 | no connection | NC |
| 4 | ±5V | | 17 | green control | green switch |
| 5 | power LED (+) | power LED and keylock | 18 | ground | |
| 6 | no connection | | 19 | no connection | NC |
| 7 | ground | | 20 | HDD LED ( – ) | HDD LED |
| 8 | key lock | | 21 | HDD LED ( + ) | |
| 9 | ground | | 22 | ±5V | IrDA connector |
| 10 | power switch | ATX power button | 23 | no connection | |
| 11 | standby voltage | | 24 | IRRX | |
| 12 | reset control | reset | 25 | ground | |
| 13 | ground | | 26 | IRTX | |

## Power LED and KeyLock

Plug the Power LED cable into the 5-pin KeyLock connector.

Some systems feature a KeyLock function with a front panel switch for enabling or disabling the keyboard. In this case, connect the KeyLock switch to the 5-pin KeyLock connector on the mainboard.

Pin assignments are: pins 1 and 3 are for Power LED; pins 4 and 5 are for KeyLock.

## Reset

Plug the Reset push-button cable into the 2-pin Reset connector on the mainboard. Pushing the Reset button on the front panel causes the system to restart the boot sequence.

## Speaker

Attach the 4-pin PC speaker cable from the case to the Speaker connector on the mainboard.

## HDD LED

Connect the 2-pin IDE device LED cable to the corresponding IDE HDD connector on the mainboard. This causes the LED to light when an IDE HDD is accessed.

## Wake-On-LAN (WOL)

Connect the 3-pin connector from the LAN board that supports the Wake-On-LAN (WOL) function to the J17 connector on the mainboard. This WOL function lets you wake up the connected computer from the LAN card.

Pin assignments are as follows:

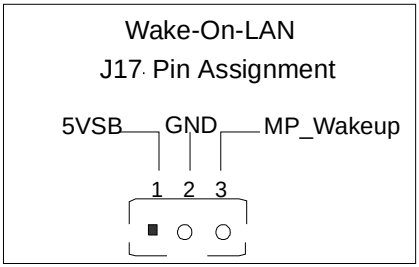


## Wake-On-Modem (WOM)

Wake-On-Modem makes it possible for an internal modem to wake up the computer.

If you have an internal modem that supports Wake-On-Modem, connect the modem to the WOM connector (J16) on the mainboard.

Pin assignments are as follows:

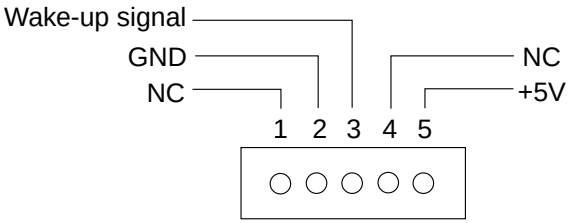

## Infrared (IrDA)

To enable the infrared transfer function, plug the 5-pin infrared device cable into the IrDA connector located on the J5 front panel connector block, pins 22 – 26 (page 68). The mainboard meets both the ASKIR and HPSIR specifications.

Pin assignments are as follows:

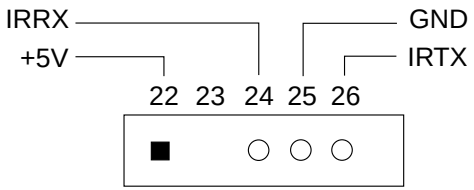


## CPU cooling fan

With the CPU cooling fan seated properly on the processor, connect the 3-pin fan cable to the J9 connector on the mainboard.

Pin assignments are as follows:

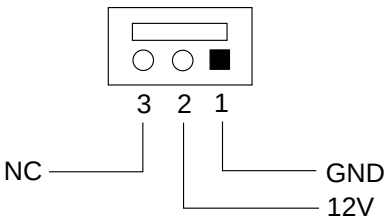

## Chassis cooling fan

After you have seated the Chassis cooling fan properly on the processor, attach the 3-pin fan cable to the J6 connector on the mainboard.

Pin assignments are as follows:

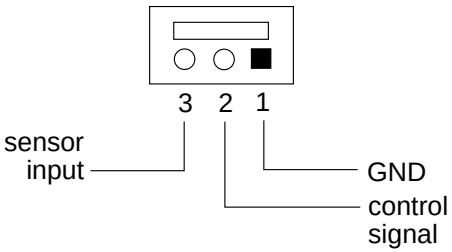

# ATX power supply

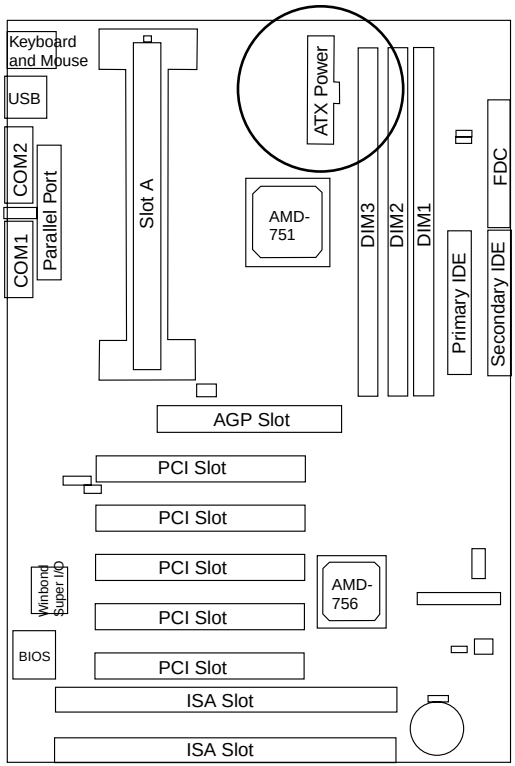


***Caution:*** *To preserve your mainboard from any remnant currents when connecting to an ATX power supply, turn off the power supply and unplug the power cord of the ATX power supply before connecting the power supply to the ATX PW connector.*

Pinouts are as follows:

ATX Power

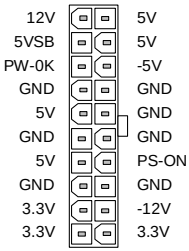


## Note

Pay special attention to the orientation of the pins.

# Clear CMOS (JP22)

After you have turned off your computer, clear the CMOS memory by momentarily shorting pins 2-3 on jumper JP22 for a few seconds. Then restore JP22 to the initial 1-2 jumper setting in order to recover and retain the default settings.

| J22 | Assignment |
|---|---|
| 1 2 3<br>pins 1-2 closed | Normal operation (default) |
| 1 2 3<br>pins 2-3 closed | Clear CMOS data |

## Clearing CMOS data or resetting your password

Follow these steps to clear CMOS data or to clear the BIOS password if you lose or forget your password:

1. Disconnect the AC power cord.
2. Place jumper J22 in the **2-3 Closed** position, then wait 5 seconds.
3. Place jumper J22 in the **1-2 Closed** position.
4. Re-connect the AC power cord and turn on the computer.
5. Clear CMOS data or reset your password.

# Multi-I/O addresses

Default settings for multi-I/O addresses are as follows:

| Port | I/O Address | IRQ | Status |
|---|---|---|---|
| **LPT1** | 378H | 7 | ECP + EPP |
| **COM1** | 3F8H | 4 | |
| **COM2** | 2F8H | 3 | |

### *Note*

If a default I/O address conflicts with other I/O cards such as a sound card, use the BIOS Setup utility to change one of the I/O addresses.

# Troubleshooting

B

This appendix provides possible solutions to situations you may encounter.

| Problem | Probable Cause | Diagnosis | Solution |
|---|---|---|---|
| No power to the system. Power light does not illuminate, fan inside power supply does not turn on. Indicator light on keyboard does not turn on. | Power cable is unplugged. | Visually inspect power cable. | Make sure power cable is securely plugged in. |
| | Defective power cable. | Visual inspection, try another cable. | Replace cable. |
| | Power supply failure. | Power cable and wall socket are OK, but system is still dead. | Contact technical support. |
| | Faulty wall outlet; circuit breaker or fuse blown. | Plug in device known to work in socket and test. | Use different socket, repair outlet, reset circuit breaker or replace fuse. |

| Problem | Probable Cause | Diagnosis | Solution |
|---|---|---|---|
| System inoperative. Keyboard lights are on, power indicator lights are on, hard drive is spinning. | Expansion card is partially dislodged from expansion slot on the mainboard. | Turn off computer. Take cover off system unit. Check all expansion cards to ensure they are securely seated in slots. | Using even pressure on both ends of the expansion card, press down firmly on expansion card. |
| | Defective floppy disk drive or tape drive. | Turn system off. Disconnect the cables from one of the floppy drives. Turn on the floppy drives. Turn on the system, check to see if the keyboard operates normally. Repeat until you have located defective unit. | Contact technical support. |
| | Defective expansion card. | Turn computer off. Remove an expansion card. | Make sure expansion card is secure in expansion socket. |
| System does not boot from hard disk drive, but can be booted from floppy disk drive. | Connector between hard drive and system board unplugged. | When attempting to run the FDISK utility, an error message is displayed. | Check cable running from disk to disk controller board. Make sure both ends are securely plugged in; check the drive type in the Standard CMOS Setup. |
| | Damaged hard disk or disk controller. | Format hard disk; if unable to do so the hard disk may be defective. | Contact technical support. |
| | Hard disk directory or FAT is scrambled. | Run the FDISK program, format the hard drive. Copy data that was backed up onto hard drive. | Backing up the hard drive is extremely important. All hard disks are capable of breaking down at any time. |

| Problem | Probable Cause | Diagnosis | Solution |
|---|---|---|---|
| System does not boot. | Hardware conflicts may be preventing the system from booting. | | Use the BIOS Setup Utility's **Reset Configuration Data** option to reset the Extended System Configuration Data (ESCD). For more information, see page 54. |
| System only boots from floppy disk. Hard disk can be read and applications can be used but booting from hard disk is impossible. | Hard disk boot program has been destroyed. | Varies. | Back up data and applications files. Reformat the hard drive. Re-install applications and data. |
| Error message reading SECTOR NOT FOUND or other error messages indicating that certain data cannot be retrieved. | Various possible causes. | Use a file-by-file backup instead of an image backup to back up the hard disk. | Back up any salvageable data. Then low-level format, partition, and high-level format the hard drive. Re-install all saved data. |
| Disk formatted on IBM PS/2 will not operate with this system. | The IBM PS/2 uses a different format from other computers. | IBM PS/2 disk format does not work in the SA Series computer. | Format disk in an AT-type computer. Insert disk into the SA Series system and copy the files you want. |

| Problem | Probable Cause | Diagnosis | Solution |
|---|---|---|---|
| After installing an expansion card (network card, tape drive card, etc.) the system no longer works properly. | Resource conflict. | All or part of the system may be inoperable. The new card may work but a mouse or COM port may not work. | Change the interrupt or RAM address on the new expansion card. See the documentation that came with the new card in order to change pin settings. Many expansion devices come with proprietary software that assist you in doing this. |
| Screen message says "Invalid Configuration" or "CMOS Failure." | Incorrect information entered into the configuration (Setup) program. | Check the Setup program. Replace any incorrect information. | Review system's equipment. Make sure correct information is in Setup. |
| Screen is blank. | No power to monitor. | | Check the power connectors to monitor and to system. Make sure monitor is connected to display card, change I/O address on network card if applicable. |
| | Monitor not connected to computer. | | Check the power connectors to monitor and to system. Make sure monitor is connected to display card, change I/O address on network card if applicable. |
| | Network card I/O address conflict. | | Check the power connectors to monitor and to system. Make sure monitor is connected to display card, change I/O address on network card if applicable. |

| Problem | Probable Cause | Diagnosis | Solution |
|---|---|---|---|
| Screen goes blank intermittently. | Screen saver is enabled. | | Disable screen saver. |
| Keyboard failure. | Keyboard is disconnected. | | Reconnect keyboard. Check keys again, if no improvement, replace keyboard. |
| No color on screen. | Faulty monitor. | | If possible, connect monitor to another system. If no color, replace monitor. |
| | CMOS incorrectly set up. | | Call technical support. |
| Floppy drive light stays on. | Floppy drive cable not connected correctly. | | Reconnect floppy cable making sure PIN1 on the floppy drive corresponds with PIN1 on floppy cable connector. |
| Error reading drive A: | Bad floppy disk. | | Try new floppy disk. |
| | Floppy disk not formatted. | | Format floppy disk: On the DOS command line, type **format a:**, then press **Enter**. |
| C: drive failure. | Setup program does not have correct information. | | Boot from drive A: using DOS system disk. Enter correct information in Setup program. |
| | Hard drive cable not connected properly. | | Check hard drive cable. |

| Problem | Probable Cause | Diagnosis | Solution |
|---|---|---|---|
| Cannot boot system after installing second hard drive. | Master/slave jumpers not set correctly. | | Set master/slave jumpers correctly. |
| Missing operating system on hard drive. | CMOS setup has been changed. | | Run Setup and select correct drive type. |
| Certain keys do not function. | Keys jammed or defective. | | Replace keyboard. |
| Keyboard is locked, and no keys function. | Keyboard is locked. | | Unlock keyboard. |